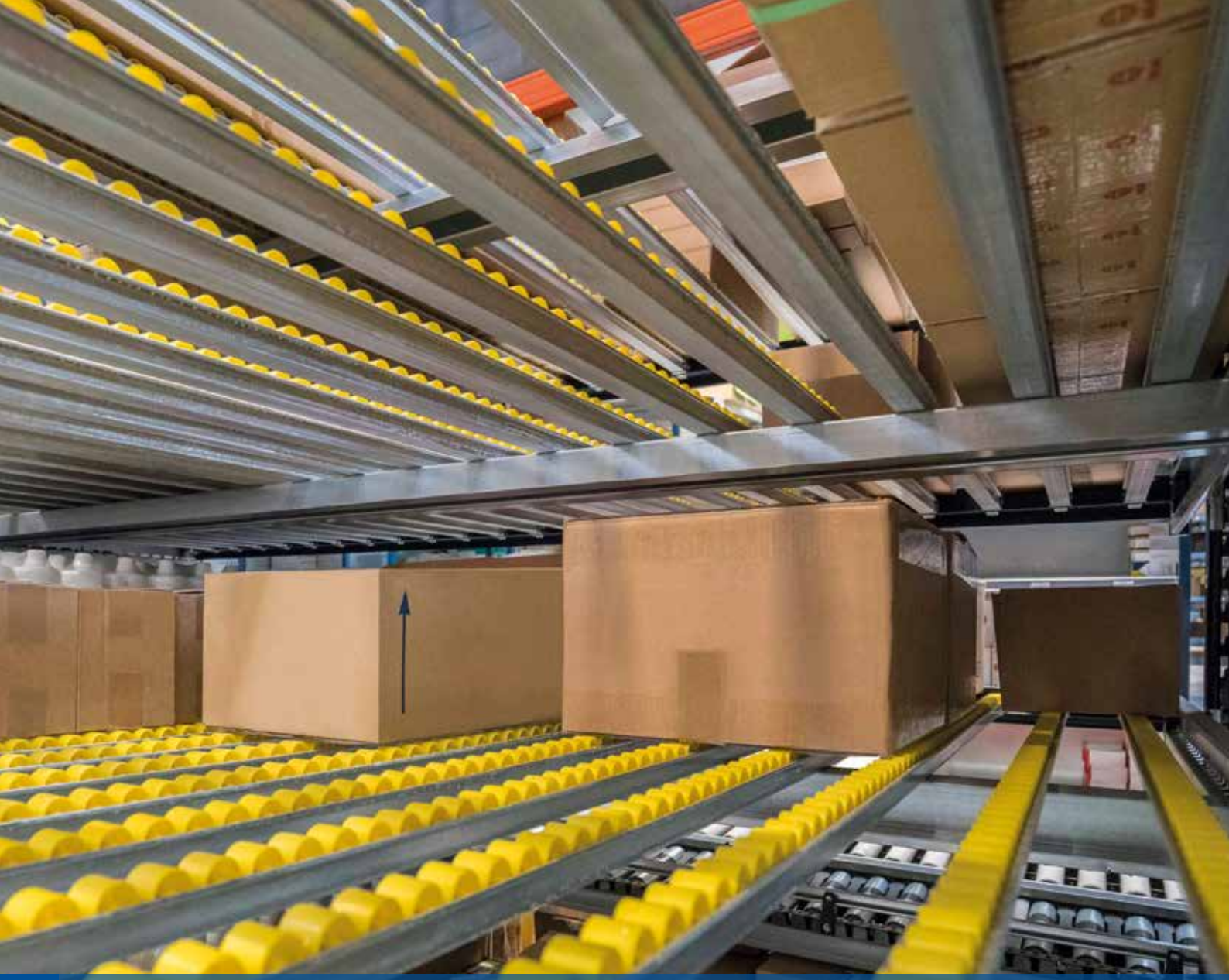

Racking for Live Picking

For reduced order picking times and optimal turnover of goods stored

MECALUX

This live storage system for light loads reduces order picking times and enables optimal turnover of goods stored.

Racking for live picking is made up of slightly inclined platforms of wheels and rollers, on which the goods are deposited at one end. They then slide down on their own until the far end, positioned at the exit aisle.

This system guarantees perfect product turnover, prevents interference in the replenishment and collection of material, and increases speed in order preparation.

It is designed for areas in the warehouse with a large volume of picking as they increase the number of lines to prepare and remove the need for personnel to make unnecessary journeys when doing these operations.

The racking for live picking requires a loading or replenishment aisle and a preparation aisle.

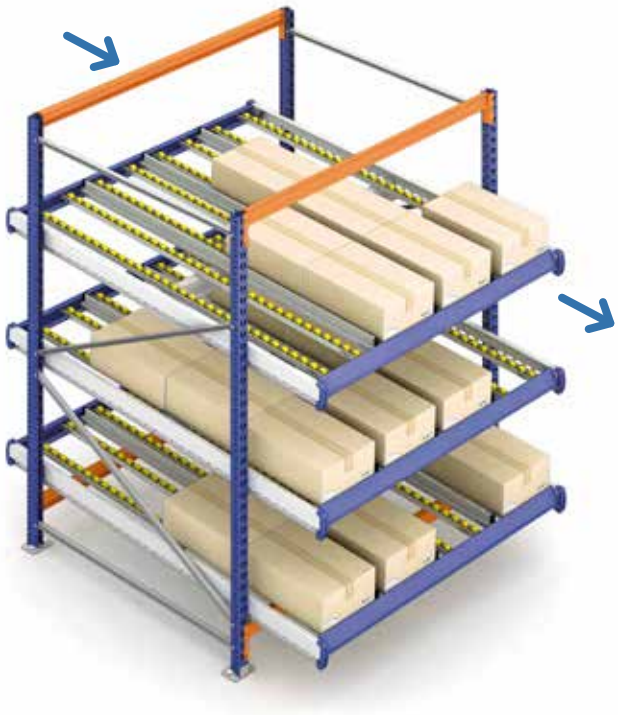

JADEO FRANCE
Item No. / Size : FR2046-03L
Description: Déguisement robe
IN CAMBODIA

General Characteristics

OPTIMAL TURNOVER

• It is achieved due to the FIFO system, where the first box or item to enter is the first one to leave.

GREATER NUMBER OF SKUs

• In the live picking system, each SKU occupies a space at the front of the rack, the reserve boxes are stored behind this space in the quantity permitted by the depth of the racking.

REDUCTION IN TIME

• Having a greater number of SKUs at the front of the rack enables the time spent in the preparation of orders to be considerably reduced, as the routes to collect the different SKUs of each order are much shorter.

IMPROVED CAPACITY

• Racking depth is increased as the intermediate aisles are eliminated.

POSSIBILITY OF FITTING A PICK-TO-LIGHT SYSTEM

• This involves fitting automated devices at the front of the racking that are connected to the warehouse management system. These devices inform the operator where to pick up goods for the order being prepared and in what quantity without having to use paper . With this system, the performance of the order pickers is increased and errors are eliminated.

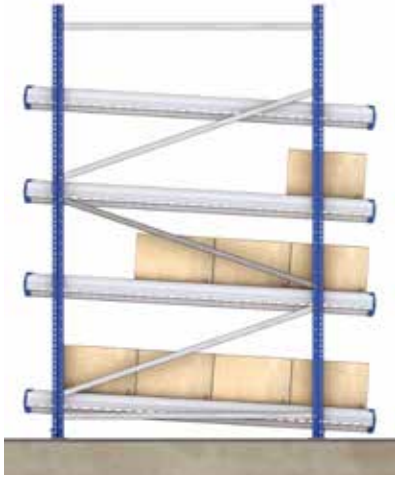

Conventional picking

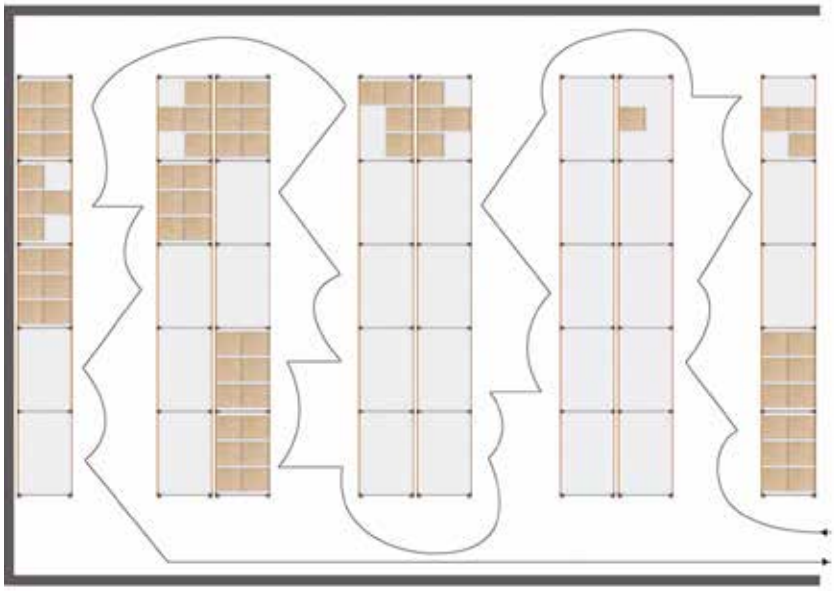

SKUs per bay: 3
Boxes per SKU: 12
No. of SKUs: 120
Total capacity: 1,400
Space used: 100%

Live picking

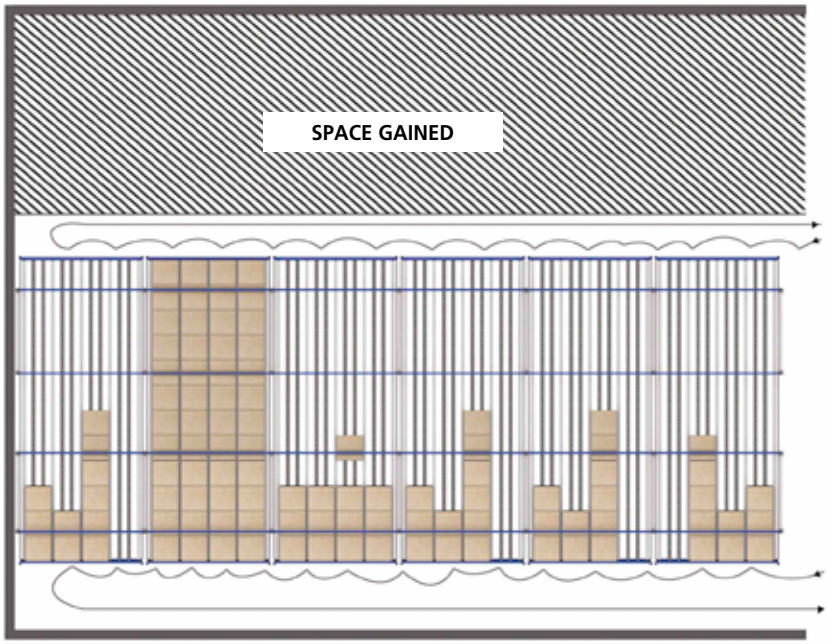

SKUs per bay: 20
Boxes per SKU: 12
No. of SKUs: 120
Total capacity: 1,400
Space used: 70%

The surface area taken up by the load is the same in both cases: compact storage allows the space corresponding to the longitudinal access aisles to be gained, representing a saving of 30% of the surface area of the premises.

Construction Systems

Medium-depth basic bays

Medium-depth bays are the most commonly used. They are built using adjustable platforms made up of side panels, entry profiles, exit beams, cross-ties, mini-rails and securing components.

The platforms can be standard bed frames (without inclined bed frames) or fitted with display trays. The incline of the latter can be adjusted to make it easier to extract the products stored inside the boxes. There is also the possibility of modifying the height and the slope in gauges of 25 mm. In addition, the part protruding from the support points can be adjusted in order to find the most ergonomic position.

The rails can also be adjusted in gauges of 12.5 mm in order to find the ideal position for each box.

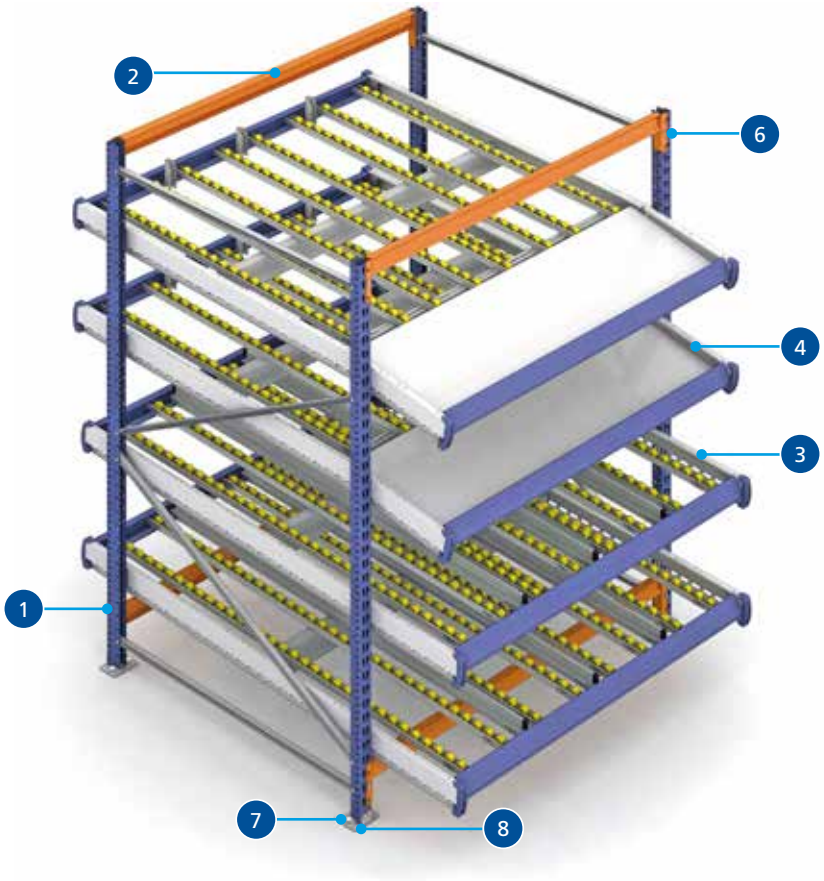

Basic components

1 . Frames and uprights
2. Beams
3 . Complete bed frames: standard
4 . Complete bed frames with display tray
5 . PD3 bed frame supports
6 . Safety pins
7 . Anchor bolts
8 . Levelling plates (shims)
9 . Mini-rails
10 . PKD mini-rail clips

Optional components

11. Mini-rail brakes
12. PD3 separators
13. PD3 guide profiles

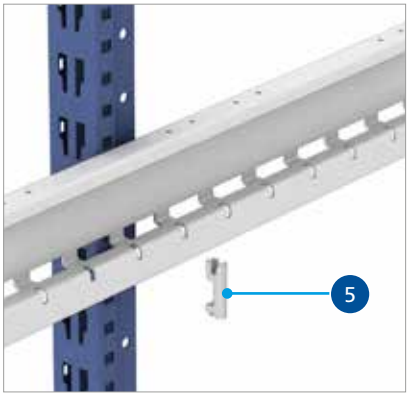

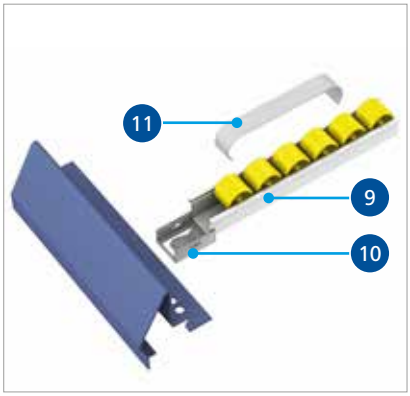

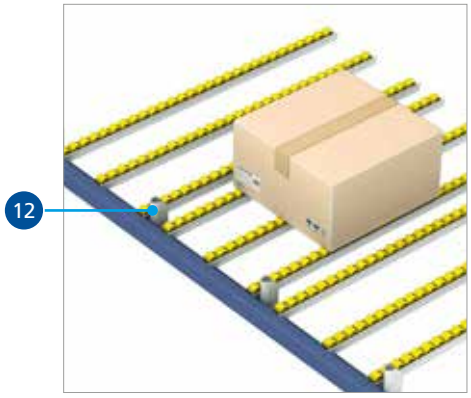

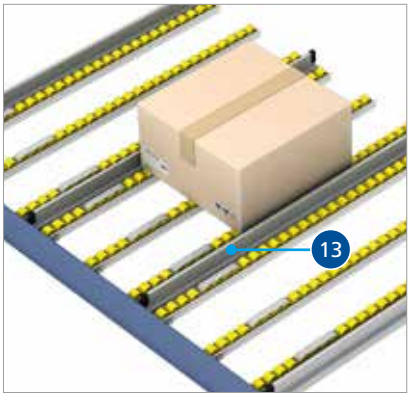

It is possible to easily rearrange the initial layout in terms of rails and inclination in order to adapt them to the changes to the warehouse. Thus:

· **Each type of box needs a given type of layout** and inclination both due to the characteristics of the material with which it is manufactured as well as its sizes and weight.

· Cardboard boxes are **sensitive to damp and humidity** in the warehouse, and a different layout or inclination is required.

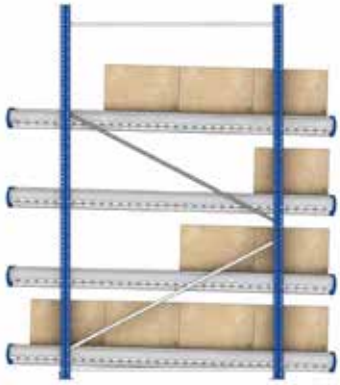

· A warehouse of these characteristics is a living warehouse, with **frequent changes of product**, either due to ABC criteria, because of new goods or as they are seasonal products.

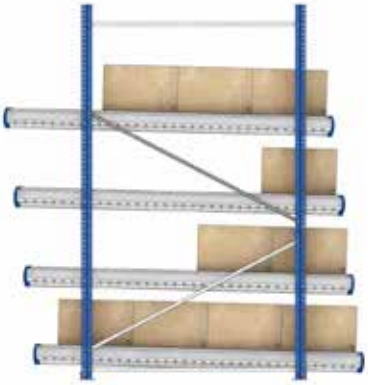

· **The most ergonomic layout needs to be found**. This will vary in function of the distribution, the height of the boxes, and the size and weight of the items, etc.

The following illustration indicates the optimal ergonomic areas of live racking for picking.

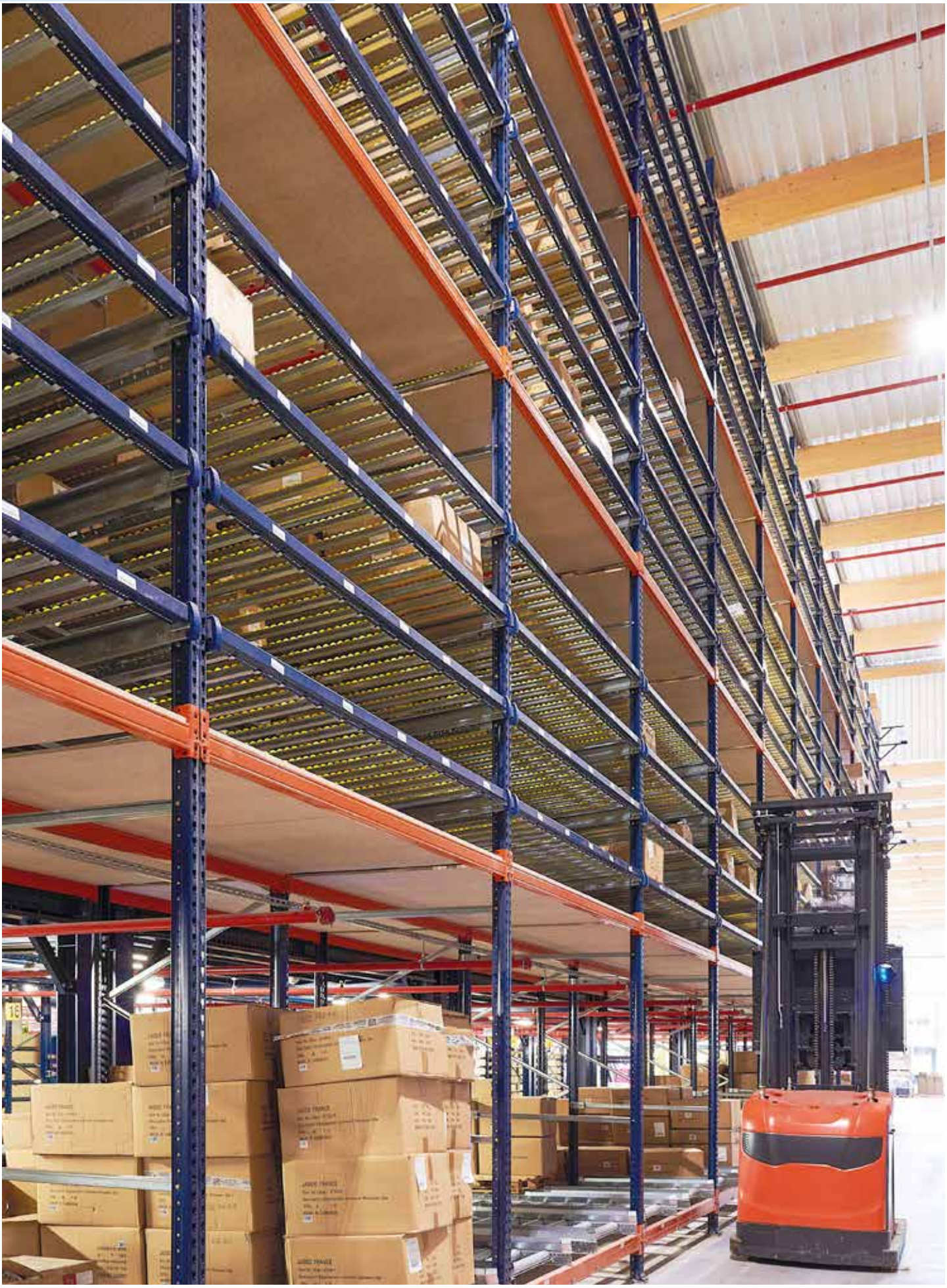

Basic shallow depth bay

This is the simplest system. It is made up of vertical frames, PD entry and exit beams and rails with wheels. It is used for light loads in shallow depth racks.

The beams have adjustment slots to fit the fixing clips.

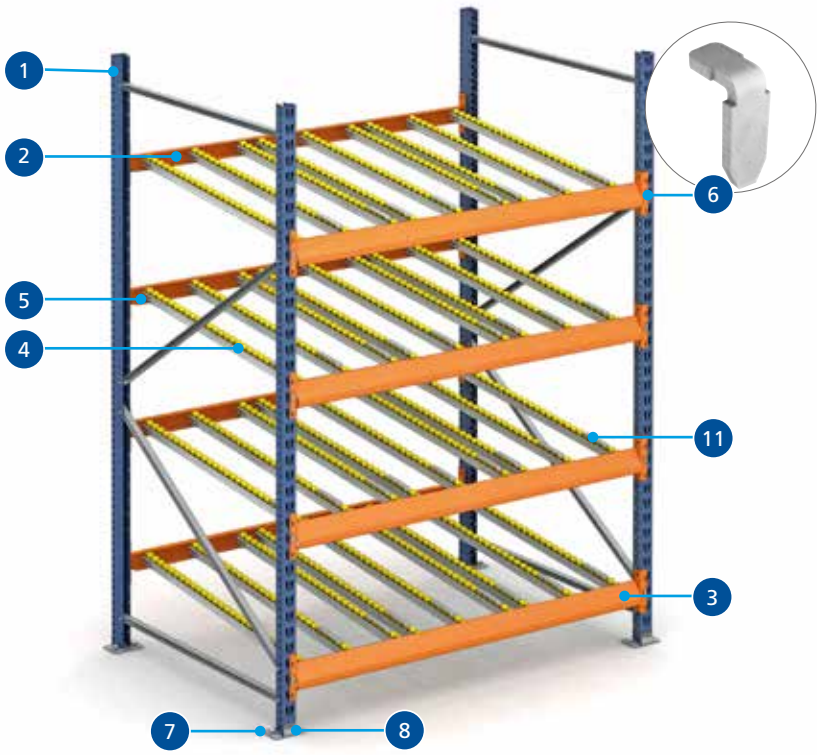

Basic components

1. Frames
2. PD entry beams
3. PD exit beams
4. Mini-rails with wheels
5. Rail fixing clips
6. Safety pins
7. Anchor bolts
8. Levelling plates (shims)

Optional components

9. Separators
10. Guides
11. Brakes

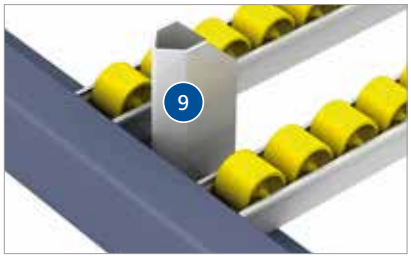

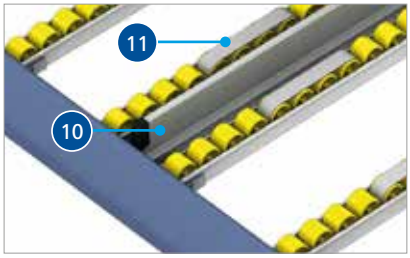

Bay with pallet reserve

Usually, pallets with reserve goods are stored in the upper part of the live racking.

The construction method is shown in the following image:

12. Pallet racking frames
13. 80MLD uprights with ties
14. 2C pallet racking beams
15. MS beams
16. Complete bed frames with mini-rails and accessories
17. PD3 adapters
18. End-stops and protection mesh
19. Anchor bolts
20. Levelling plates (shims)
21. Connecting components
22. PD3 frame supports

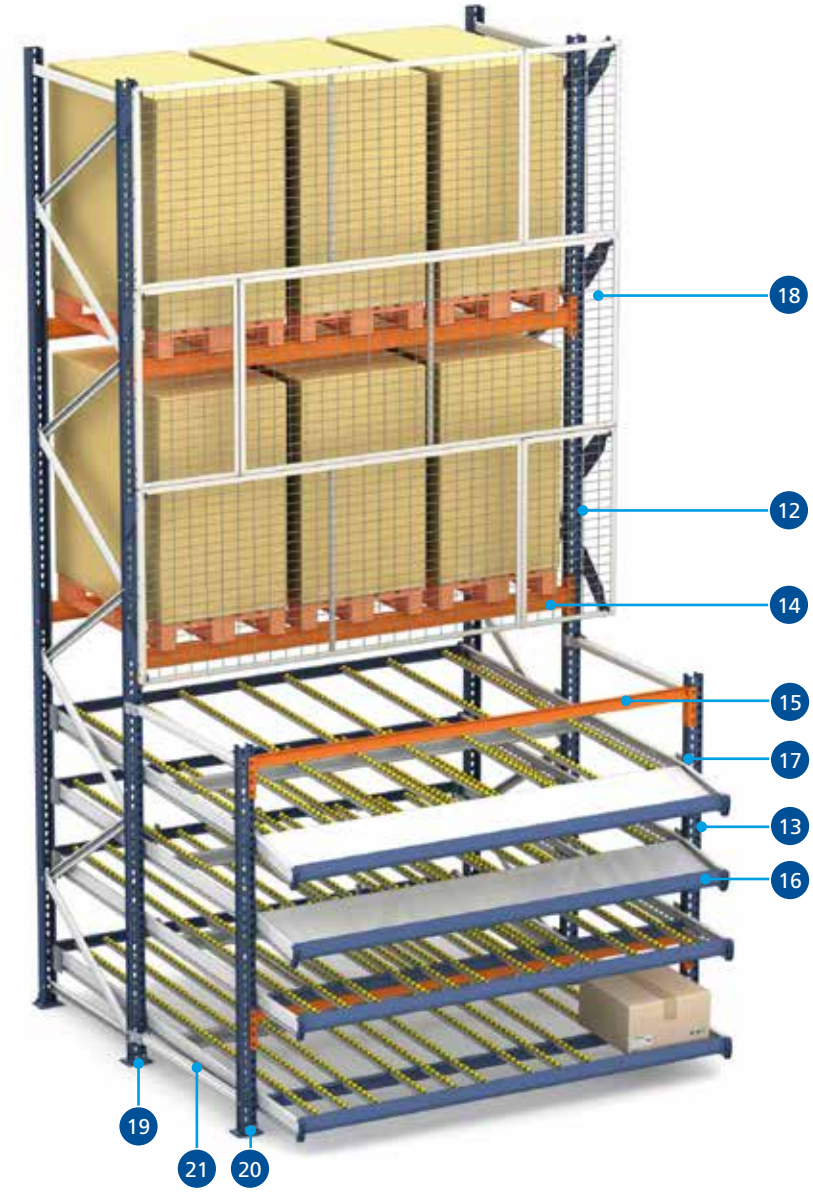

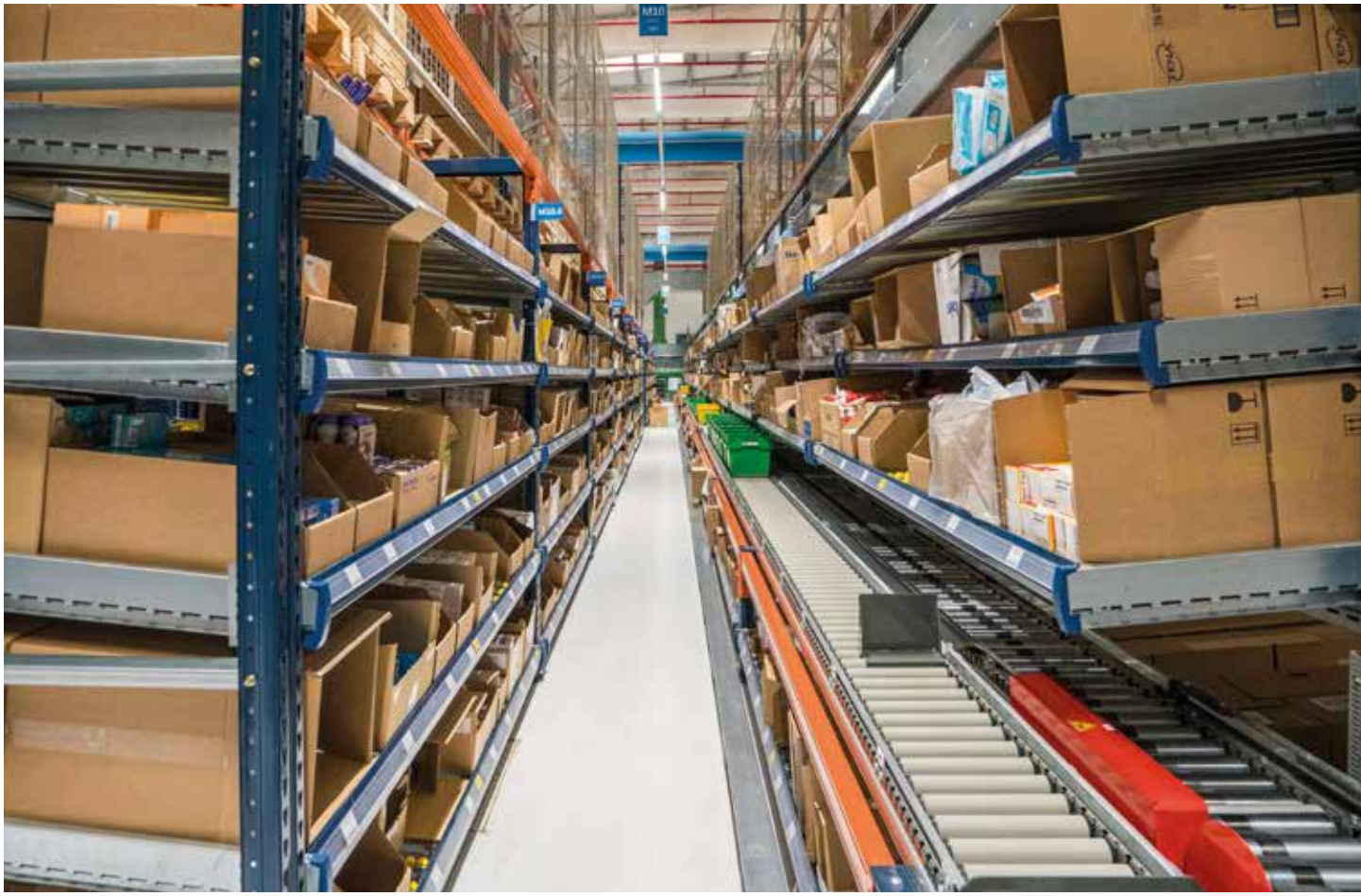

Bay with bench for conveyor

The bench fitted with rollers or a conveyor belt is installed to facilitate order preparation, allowing prepared products and complete boxes to slide along.

23. Uprights with footplate
24. PD conveyor support
25. Conveyor

Solution with one conveyor
This is the most commonly used solution. The operator moves the box along the conveyor with the products deposited inside.

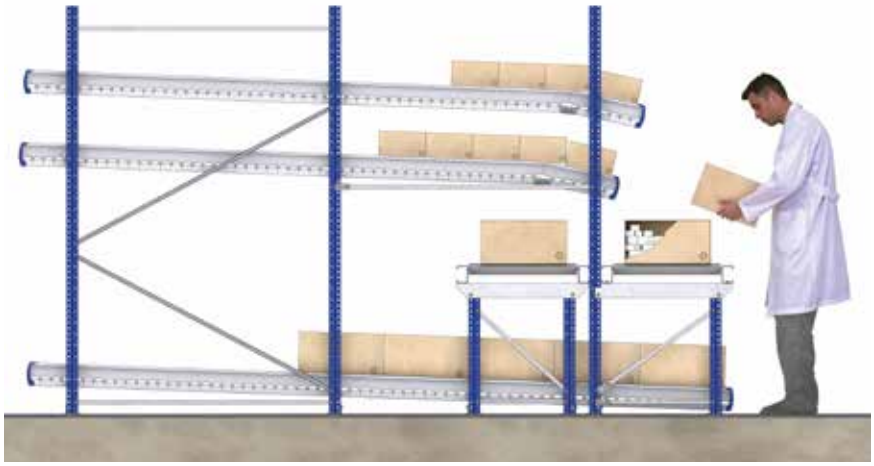

Solution with two conveyors
The inner conveyor is continually in movement. The boxes are filled with complete orders, so removing the need for the operator to extract the prepared orders.

Mobile bays

Using the same components as a basic bay (both for bays built with frames and those built with beams), mobile bays can be formed by fitting a platform with wheels inside the bay, as is shown in this illustration .

Systems with great depth

In installations with a great depth of racking, the frames are spliced together using frame side profiles. Bed frame ties are used to connect the pieces. The rest of components are the same.

Bed frame tie

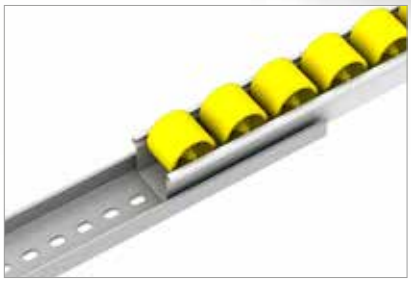

Mini-rail splice

Construction Systems

The bed frames or platforms hold the stored goods. They are designed to join the different components necessary and can be fully adjusted. Assembly and the modification of the positions of their adjustable components are both very simple.

There are two types of bed frames:

- Standard bed frames.
- Bed frames with a display tray.

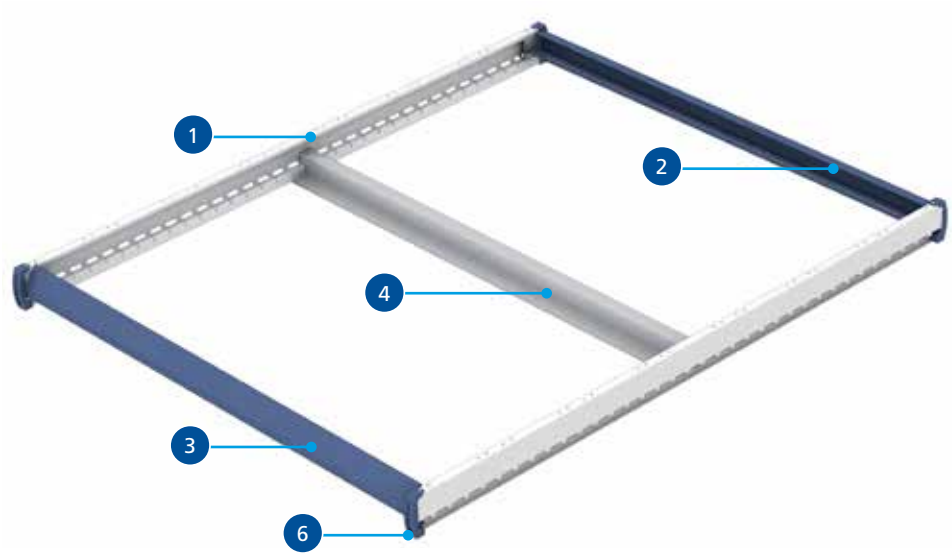

Standard bed frames

Basic components

1. PD3 bed frame side profiles
2. PD3 entry profiles
3. PD3 exit profiles
4. PD3 cross-ties
5. PD3 bed frame ties
6. Bed frame side profile plugs
7. PD3 bed frame safety bolts

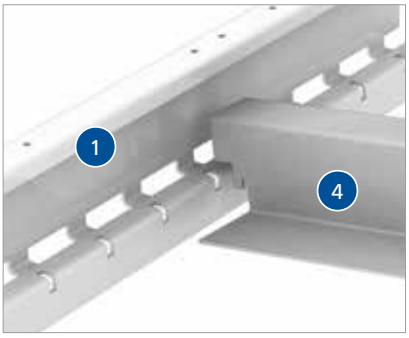

The cross-ties are secured by simply fitting them into the slots of the bed frame side profiles.

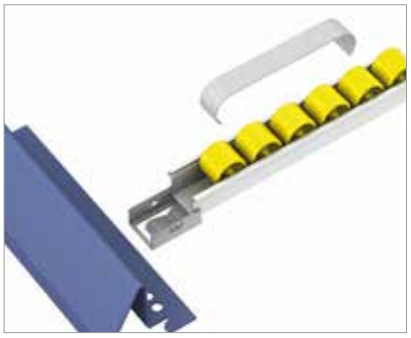

The entry and exit profiles come with slots which mark out the positions of the clips which secure the rails.

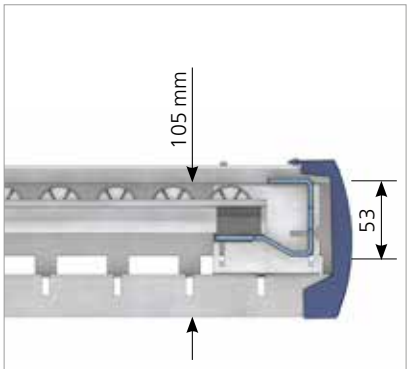

Space occupied by the bed frame and the rails

Side section of a complete bed frame.

The entry and exit profiles are secured to the side profiles using bed frame ties, which are joined to the side profiles by fixing them into position with bed frame safety bolts.

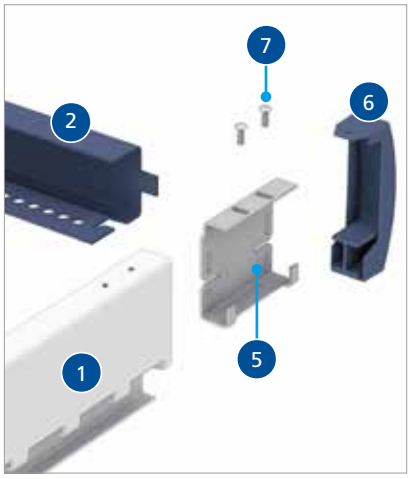

Entry profile

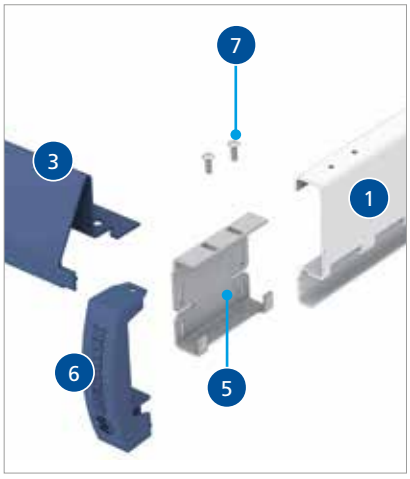

Exit profile

Bed frames with display tray

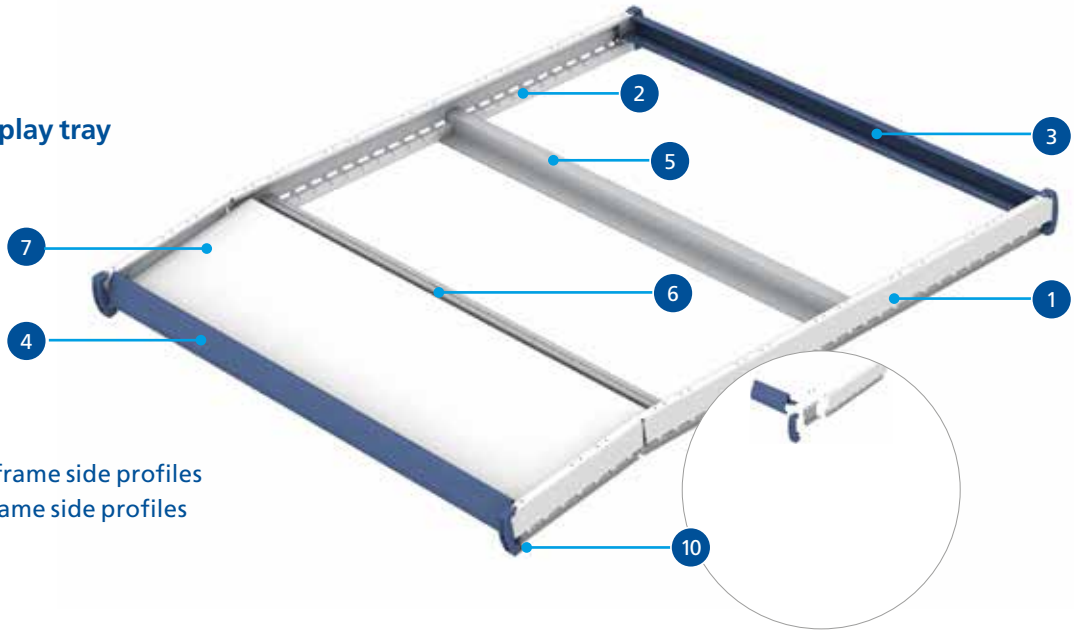

Basic components

1. Right PD3 tray bed frame side profiles
2. Left PD3 tray bed frame side profiles
3. PD3 entry profiles
4. PD3 exit profiles
5. PD3 cross-ties
6. PD3 tray cross-ties
7. PKD trays
8. PD3 bed frame ties
9. PD3 tray side profile fixing supports
10. Bed frame side profile plugs
11. PD3 safety bolts

The cross-ties are secured by simply fitting them into the slots of the bed frame side profiles.

The side profiles have a space which can be folded to find the required inclination. The bed frame ties hold this position.

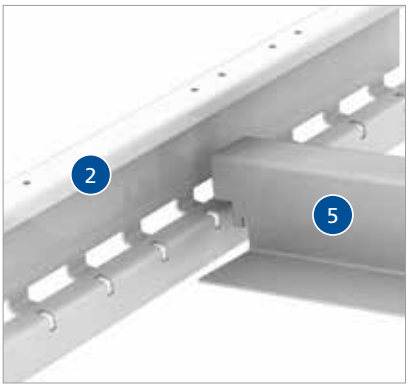

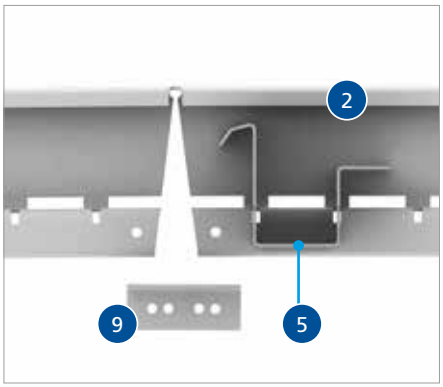

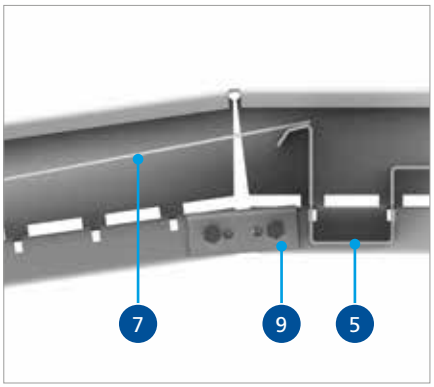

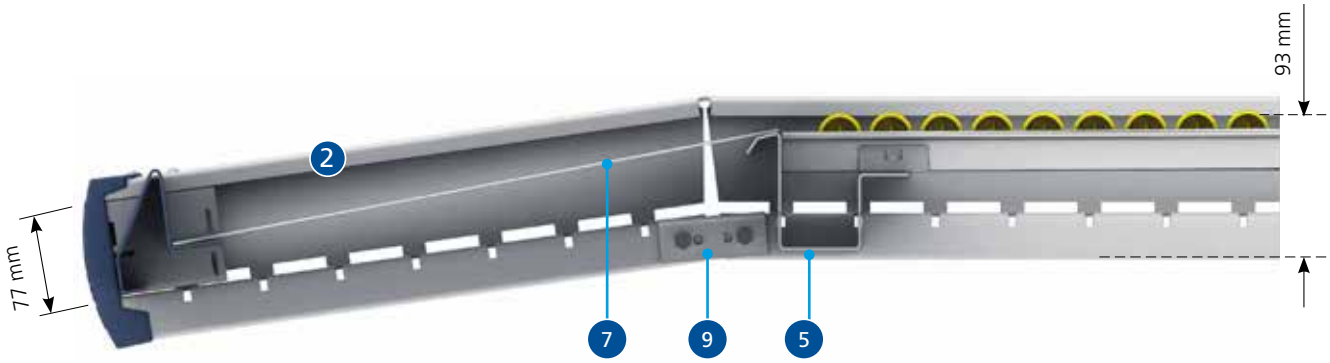

The entry and exit profiles are secured to the side profiles using bed frame ties, which are joined to the side profiles by fixing them into position with frame safety bolts.

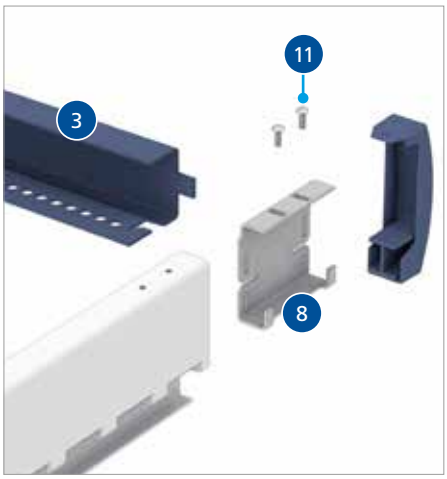

Entry profile

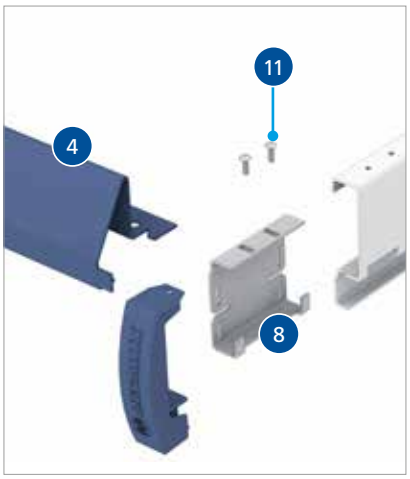

Exit profile

Mini-rails

The live storage mini-rails are metal profiles into which the plastic wheels are fitted with their respective axles. The axles are also made of metal and guarantee smooth rolling, providing great resistance against impacts when depositing goods.

The wheels are manufactured in single units, wheels with flanges or with alternating double wheels as can be seen to the right.

A. The single wheels are used when the boxes move on both sides, basically cardboard boxes. The separation between wheels can be 33, 50 or 66 mm, depending on the weight and the quality of the box.

B. The wheels with flanges are used mainly with plastic boxes in order to guarantee an area of reliable rolling, often the side edges of the boxes themselves.

C. The rails with alternating double wheels are ideal for boxes with an irregular surface for rolling.

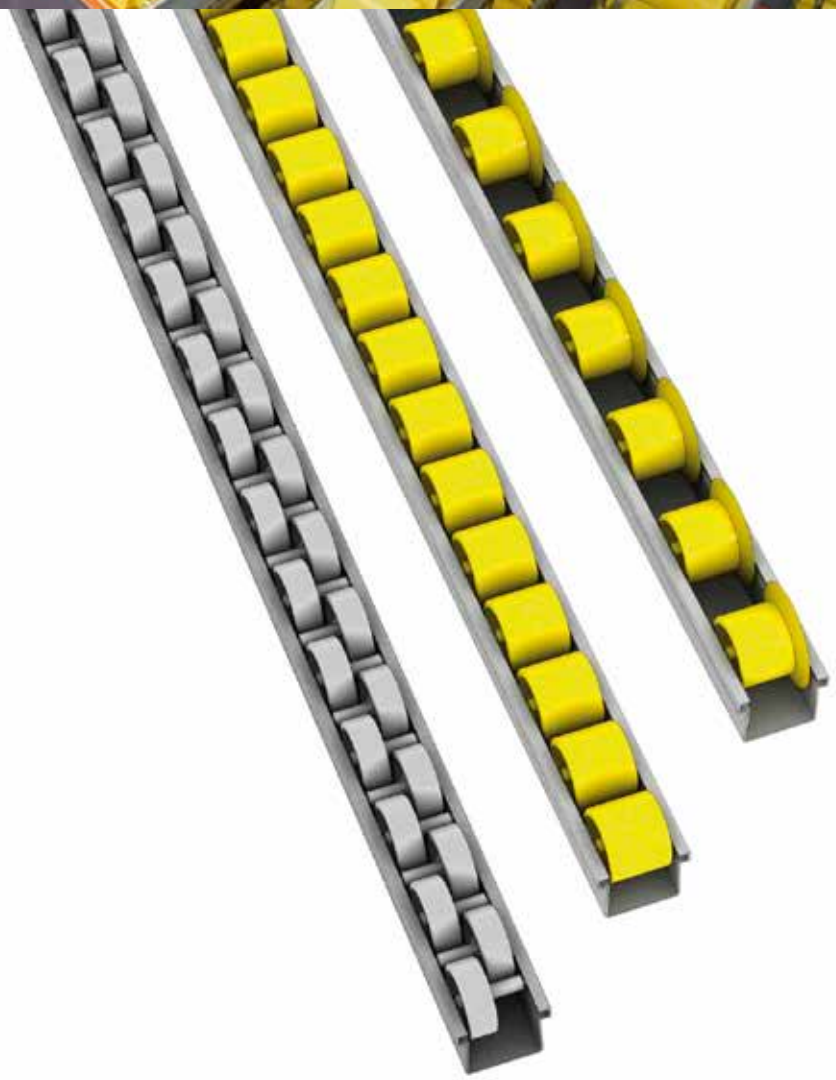

A. Single wheels

B. Wheels with flanges

C. Alternating wheels

Arrangement of the mini-rails

The arrangement, number and model of mini-rails varies in function of the characteristics of the boxes and their dimensions and weight.

For example, when cardboard boxes are used, the box moves along the sides of the mini-rails, while if plastic boxes are employed, the smoothest and strongest area is chosen. In this case, wheels with flanges are used so as to ensure they are properly centred.

The mid-position mini-rails may need to be of the alternating double wheels type.

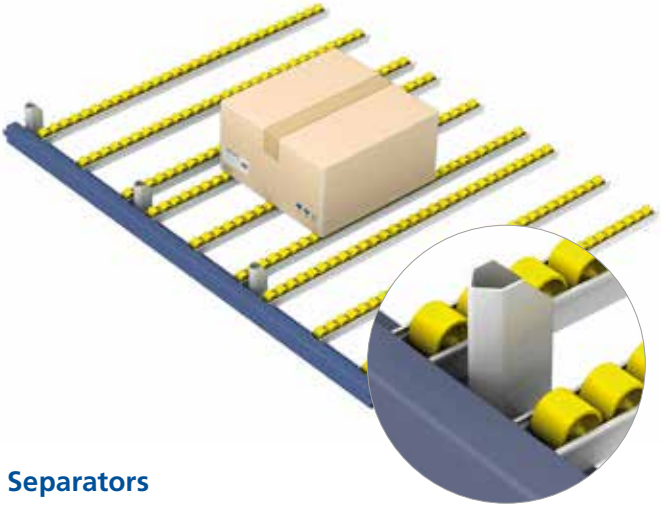

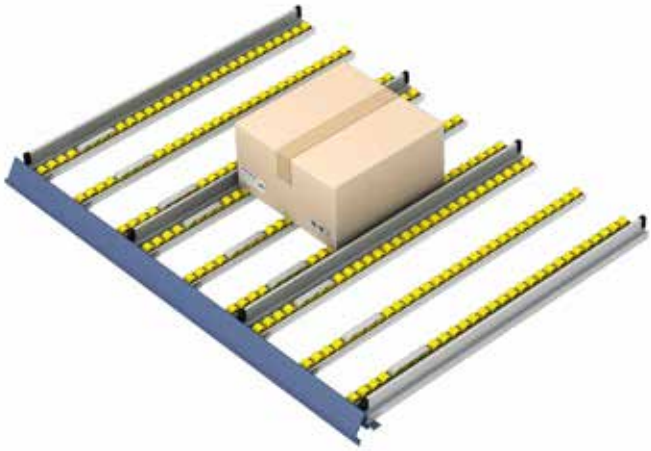

Separators

They are fitted in the beams or entry profiles in order to help to centre the box in the rails.

They are optional but recommended.

Guides

They guide the boxes all along the depth of the rack. They are fitted in the beams or in the entry and exit profiles, maintaining a fixed space between parallel boxes, so preventing them from brushing up against each other.

In function of the product, it is necessary to study the usefulness of fitting this component and the slope required to overcome the possible resistance from the roughness of the box in the guide itself.

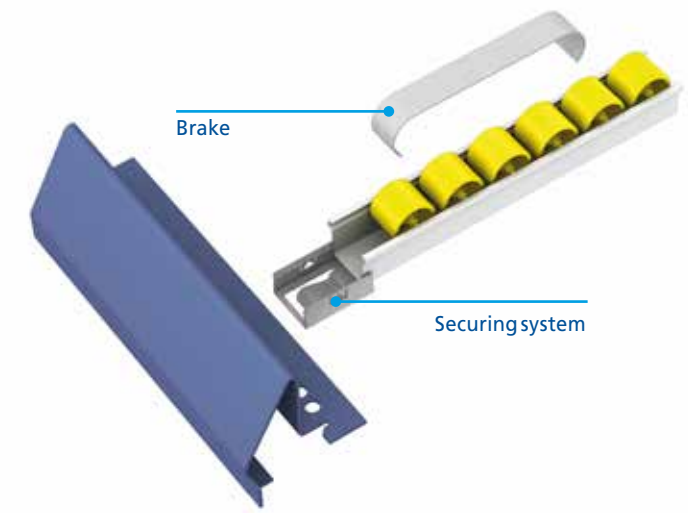

Brakes

Fitted at the end of the rail, they enable the speed of descent to be reduced and so prevent the box from colliding into the exit profile.

Securing system

A fixing clip centred with the holes in the entry and exit profiles secures the mini-rails to these profiles.

Safety device

Device manufactured in plastic with a metal axis joined to the mini-rails at the entries.

It allows the box to move towards the exit and prevent it from moving back after being accidentally pushed by the operator.

It is fitted when automated means are used to load the rack, preventing therefore accidents due to incorrect handling.

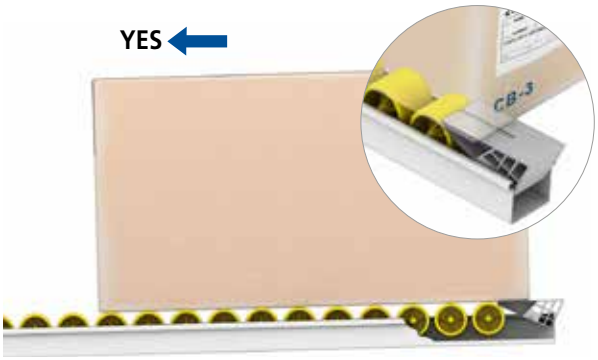

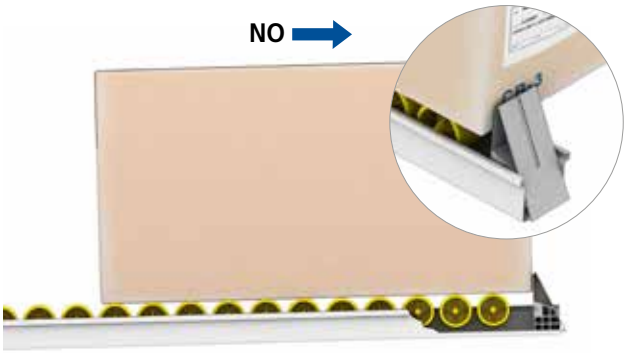

Layout of levels

In addition to the above points, when arranging the levels and in order to guarantee the correct functioning and access to the stored products, the necessary margins must be taken into account. The proper distribution depends on the load unit (sizes, weight and shape), how it is picked (complete or broken-up units), the size of the product to be picked within the boxes, and on the working system. The method of picking the product conditions the layout in height and whether or not to fit display trays in the levels.

Different solutions, which can be combined, are shown on the following pages.

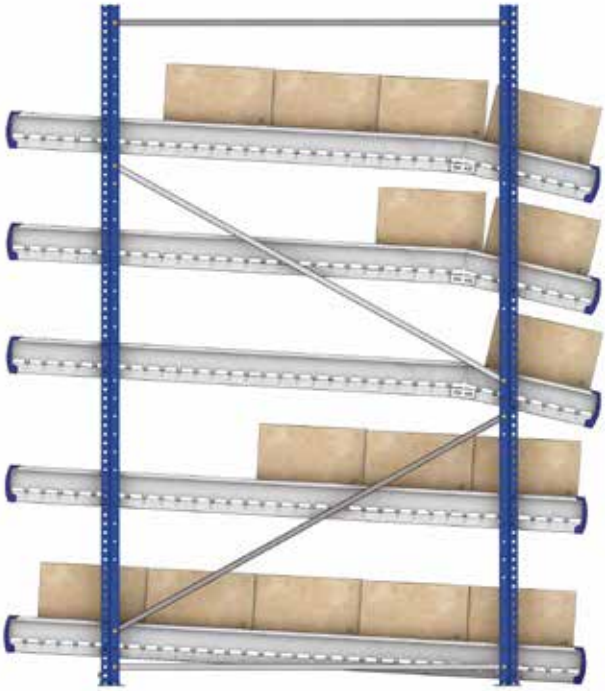

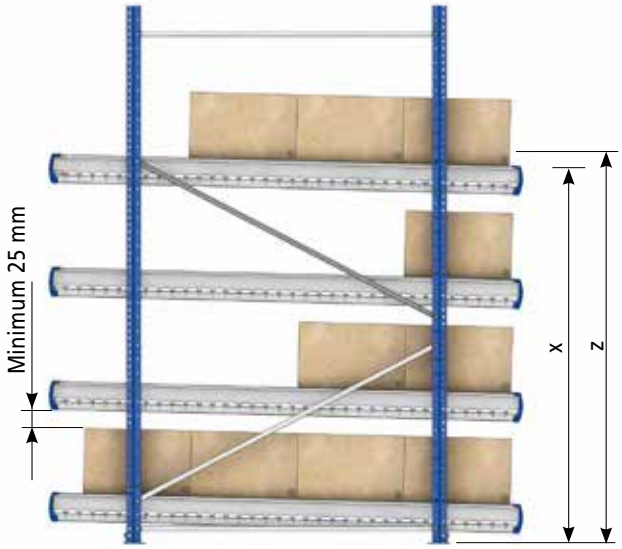

- For load units picked as complete units or with a front opening.

Not fitted with display trays.

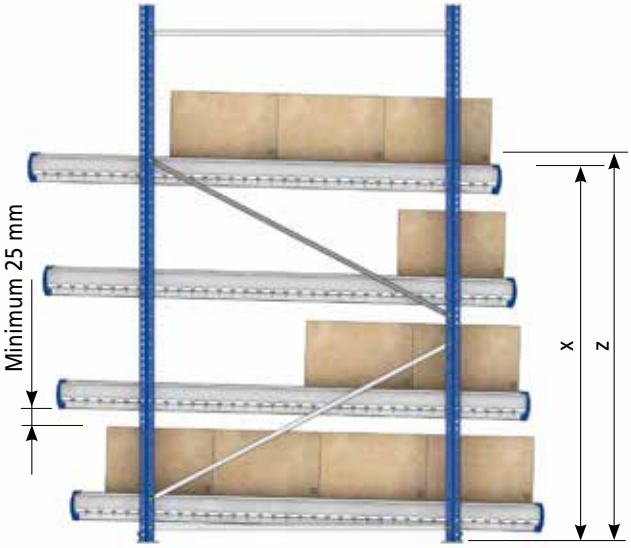

- Ideal layout to pick small products from inside of boxes (from top) or medium-sized products in boxes with semi-opening at front.

Not fitted with display trays.

The recommended margins must be taken into account.

• Storage of boxes with top opening for picking medium-sized products.

Provides good visibility and access to the product.

Display trays are fitted in each level.

The margins must be taken into account: above all the 'Z' distance and the space for picking the product.

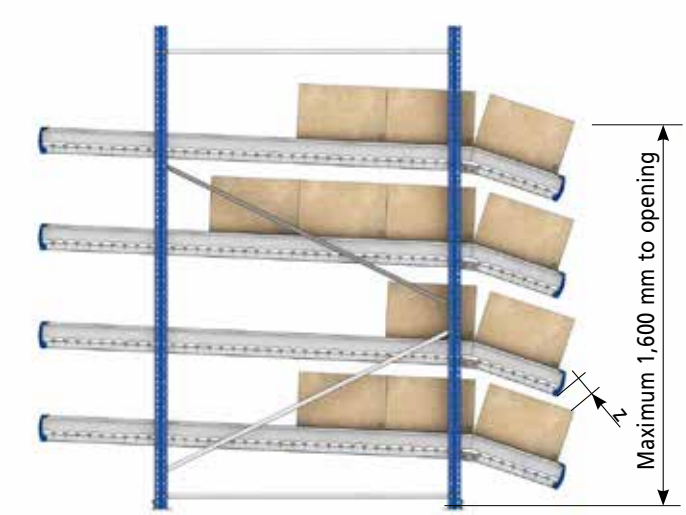

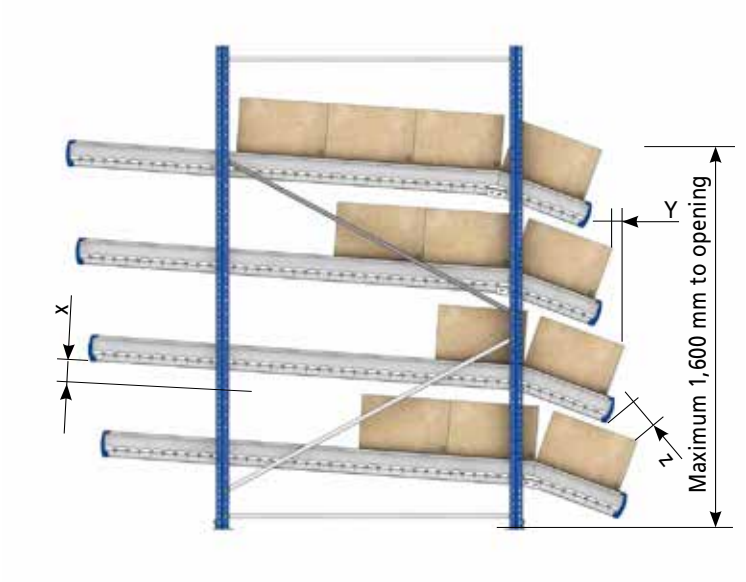

• This example is perfect for the storage of boxes with a top opening with medium sized and large products.

Fitted with display trays in each level.

Provides good visibility and access to the product.

The back position of the bed frames with respect to the front of the box increases the space available for picking ('Z').

• This layout, in addition to combining standard levels with display trays, is designed to fit a bench with a conveyor.

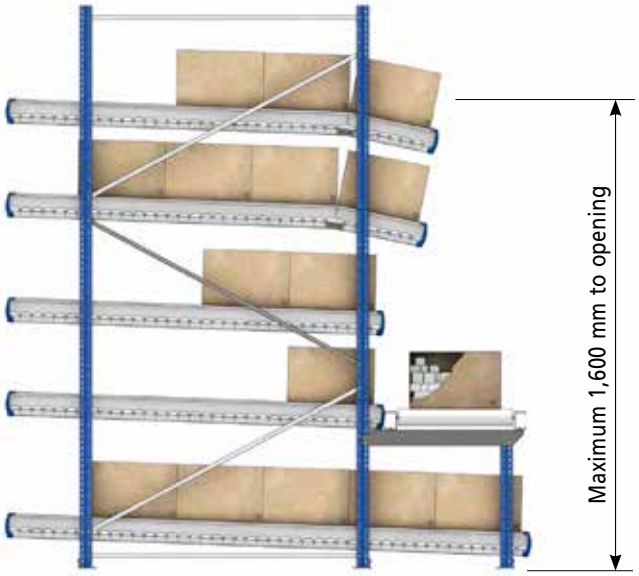

The above solutions can be combined with each other.

Applications and combinations

A very wide range of applications and combinations are possible. A selection are shown below.

1. This illustration represents the simplest solution, with entries made on one side and exits made on the other.

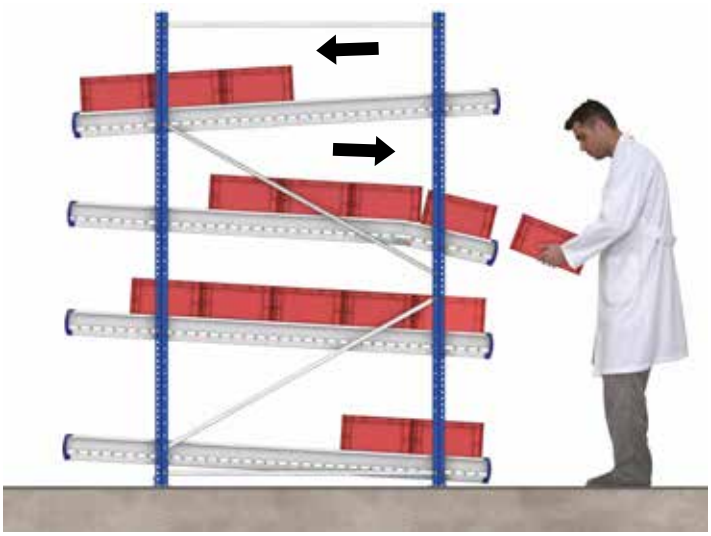

2. In this image, the solution involves returning empty boxes using the level above. This is a commonplace solution in assembly chains.

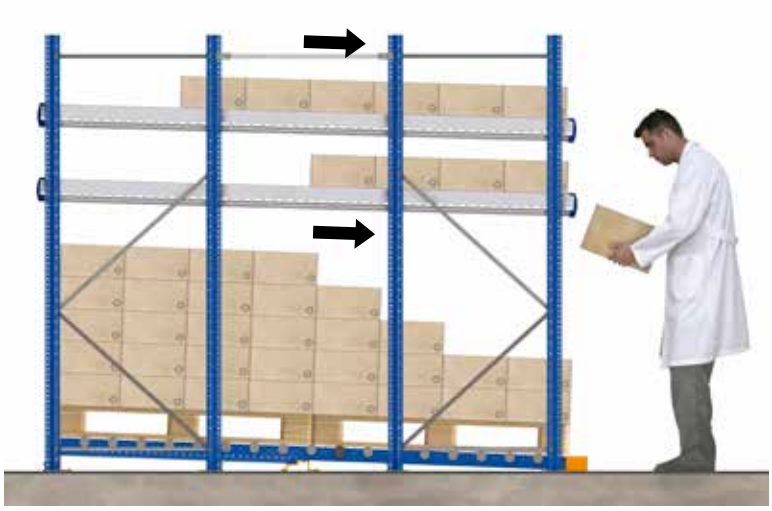

3. Here, the picking of boxes in live picking levels is combined with picking on pallets in the level below, and also on surfaces slanted with rollers.

4. This image represents a classic solution with the conveyor fitted flush with the rack and forming part of it.

In this case, the operator picks up a box or container which moves along the conveyor, and puts the prepared products in it.

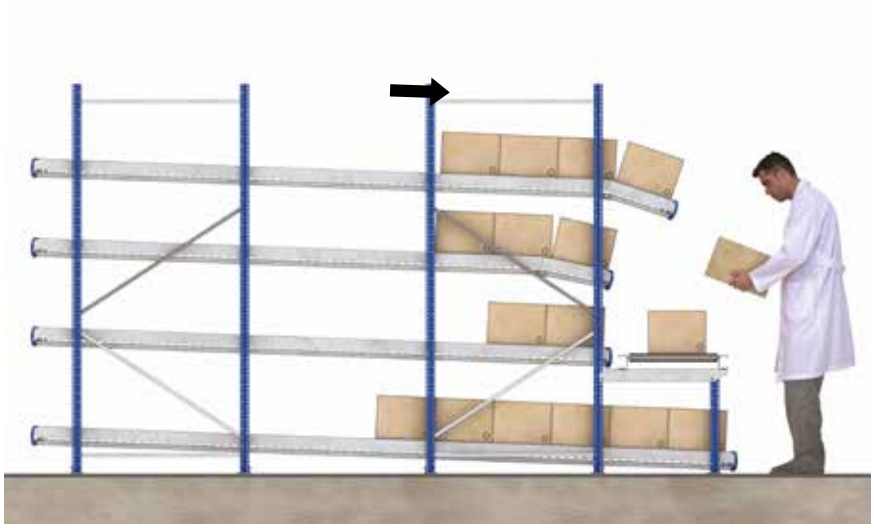

5. In this solution, there are two conveyors: one with rollers without traction and used to prepare the order and manually move the box or container; and one motorised inner conveyor to send the boxes along with complete orders.

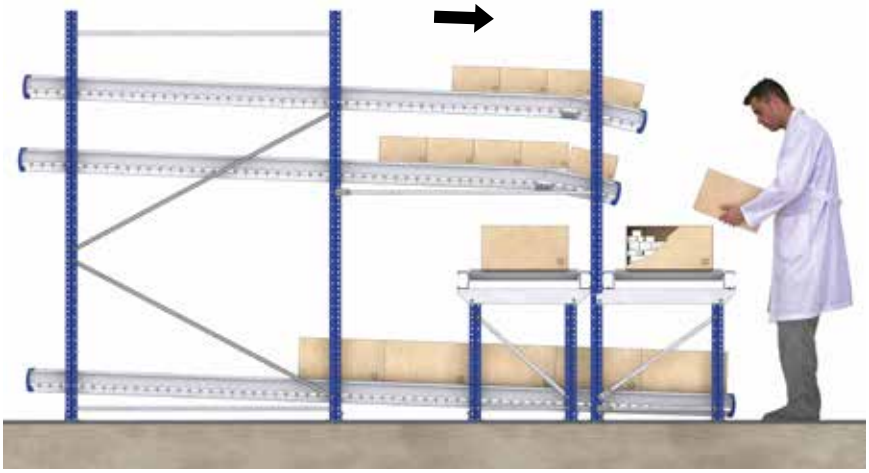

6. In the illustration below with basic bays, the operator deposits the goods on a conveyor set up in the middle. This moves the load to the dispatch or consolidated areas.

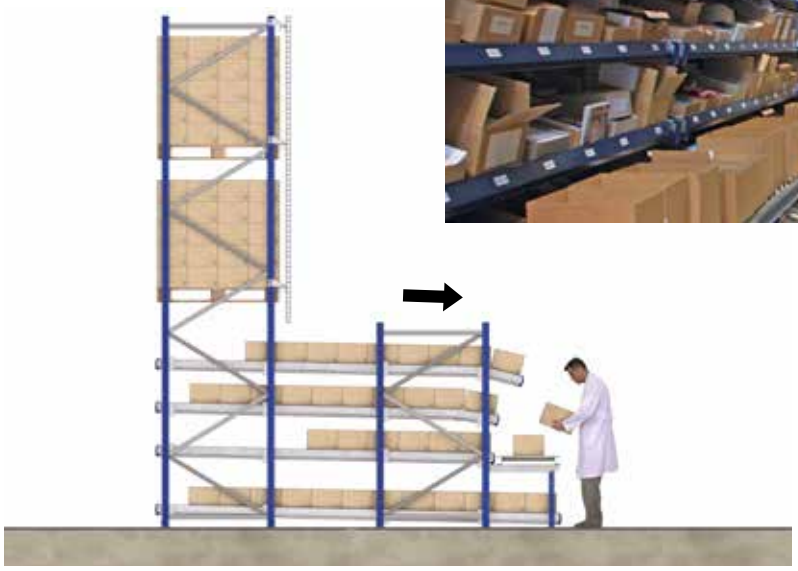

7. Levels are fitted above the live picking racks in order to store pallets, with a reserve of products placed below.

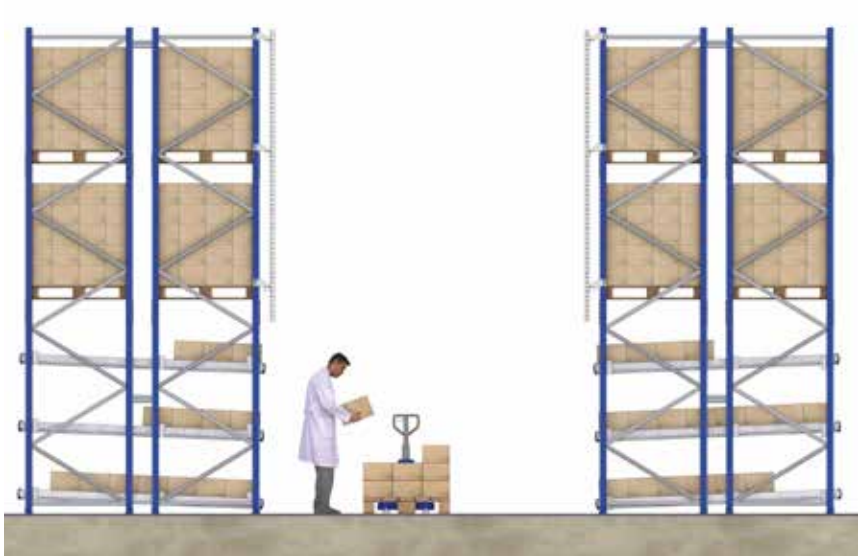

8. This drawing represents a pallet racking warehouse in which live picking levels have been built in the lower part.

There are load or replenishment aisles along with others for preparation.

The pallets stored in the preparation aisle should be products with a lower turnover or form part of the stock reserve.

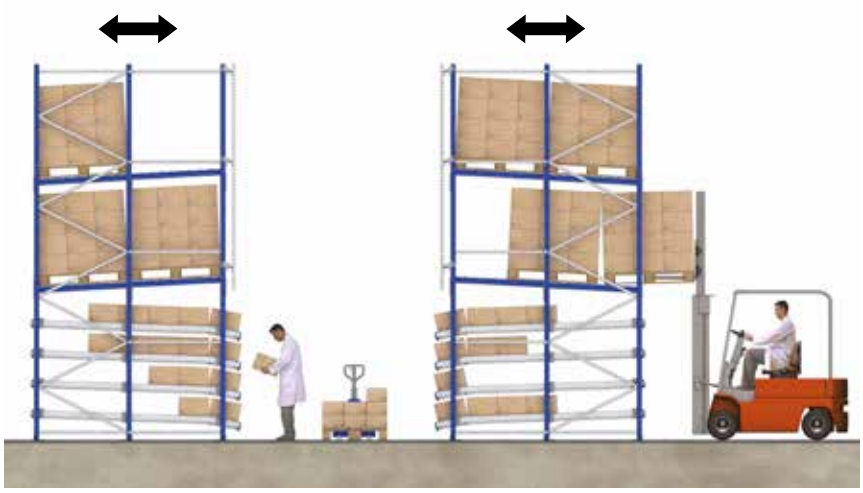

9. In this solution, use is made of the volume above the live racking in order to store reserve pallets above the levels with rollers (push-back); the pallets are entered and extracted on the same side.

On the preparation aisle side, end-stops and protection meshes are fitted in order to prevent the goods from falling.

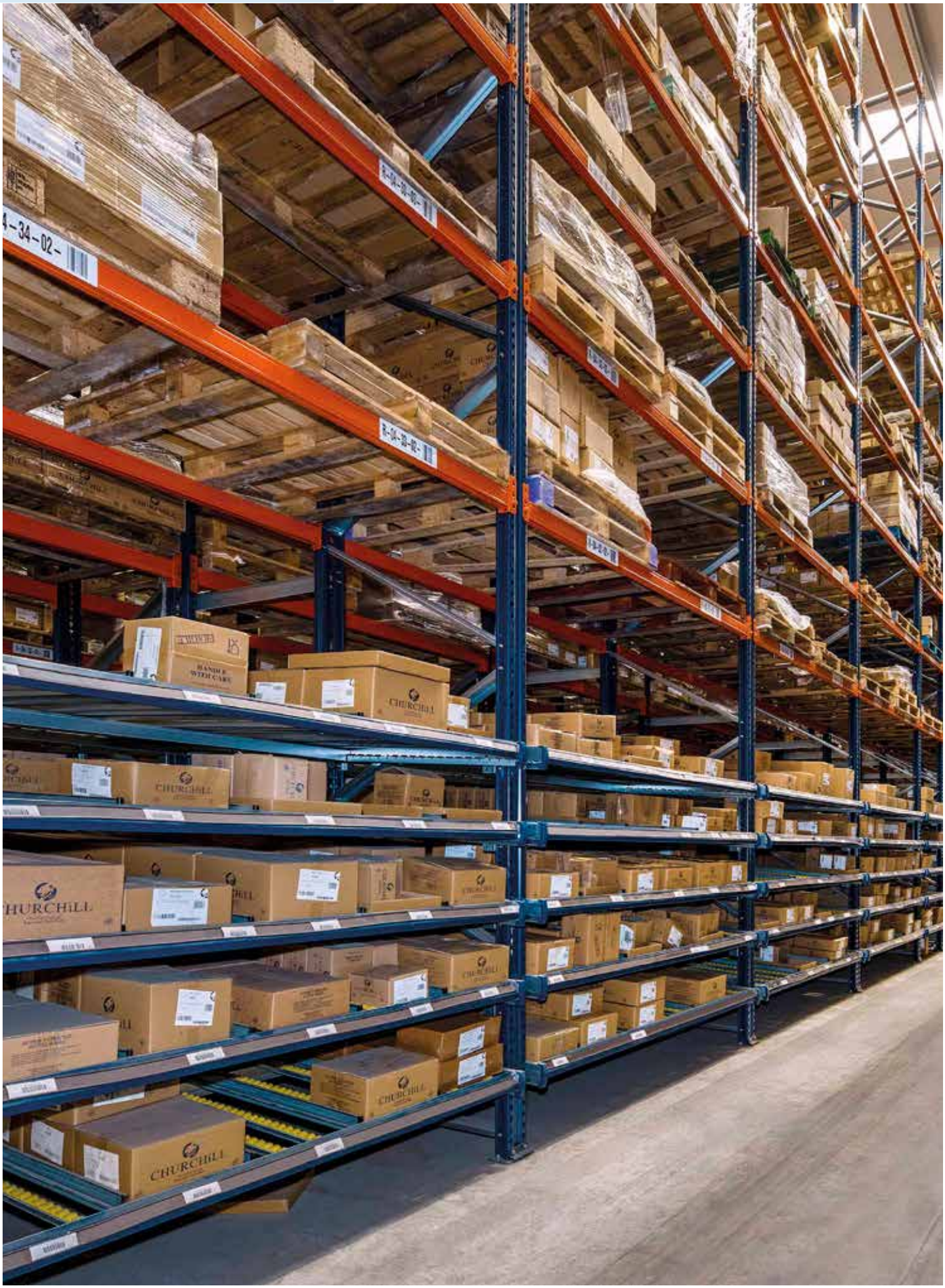
CHURCHILL

10. This case is similar to the above. Here, the upper volume of the preparation aisles is used as a reserve area and, in addition, picking is performed on one of the sides from pallets deposited on slanted roller paths.

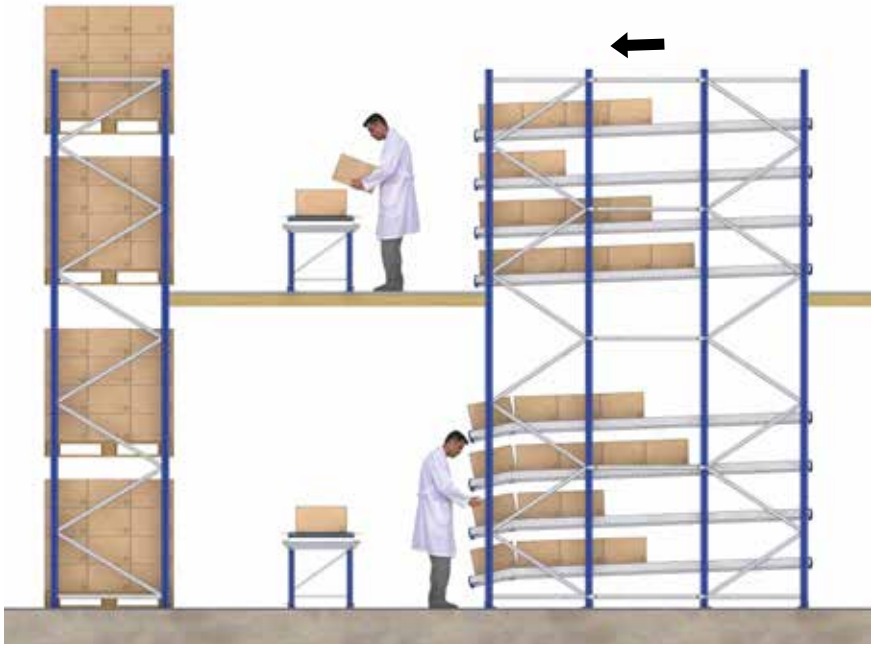

11. This drawing shows a high-bay live picking warehouse with an intermediate gangway.

In one of the sides picking is performed from pallets deposited on pallet racking.

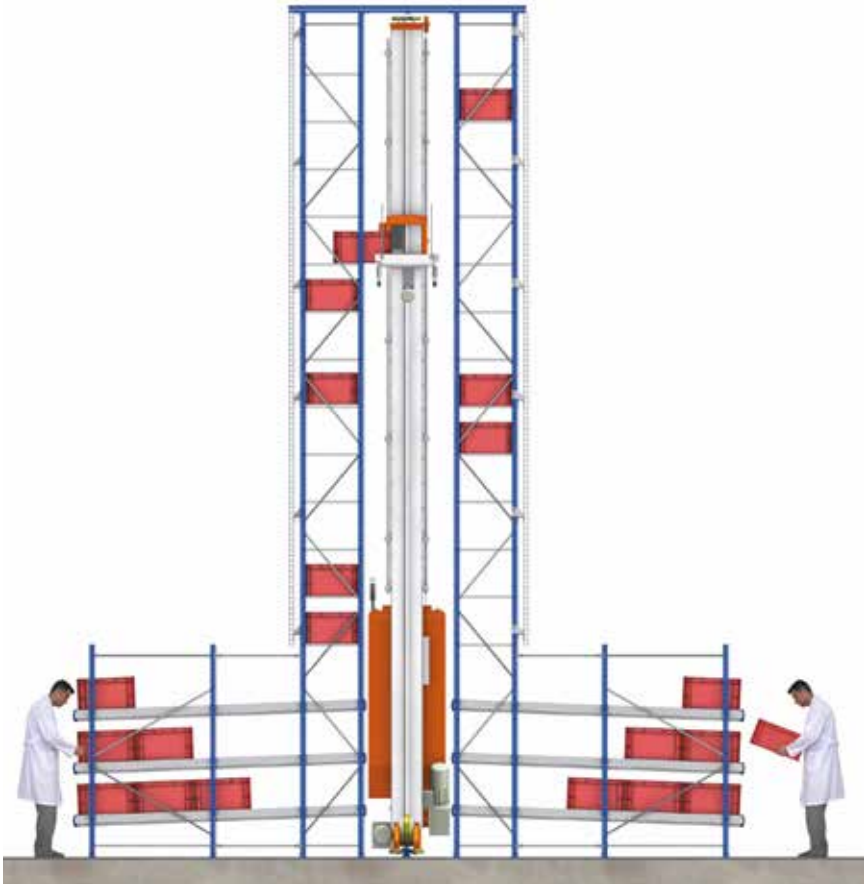

12. This solution represents a live picking warehouse automatically supplied by a stacker crane, which makes full use of the height of the warehouse as a reserve area.

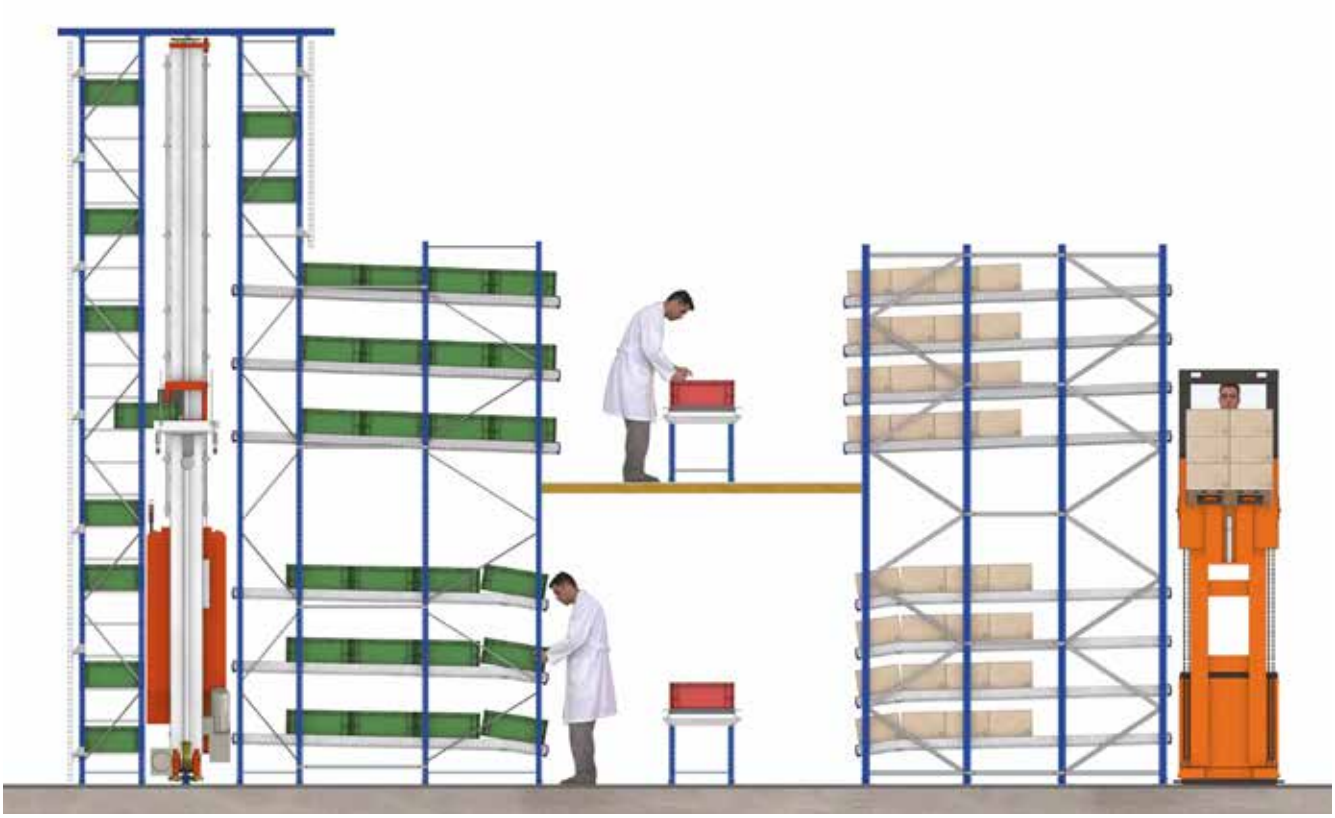

13. Here a high-bay live picking solution is combined with a gangway.

One rack is automatically supplied by a stacker crane and the other with a VNA machine that takes the loaded pallets, which the operator then deposits in the levels.

Order preparation with the pick-to-light/put-to-light system

Pick-to-light system

This consists of an automated system connected by computer to the WMS for the preparation of orders without the use of paper. Numerical screens are placed on the rack or levels which light up with the number of units to pick if the order to be prepared includes the product in this location.

The operator follows the instructions on the screen and when he/she has finished with this SKU, he/she presses a button confirming that the operation is complete and the light turns off.

When a new order is to be prepared, the positions which are to be picked are automatically lit up.

This system provides speed and flexibility in the preparation of orders and considerably reduces errors.

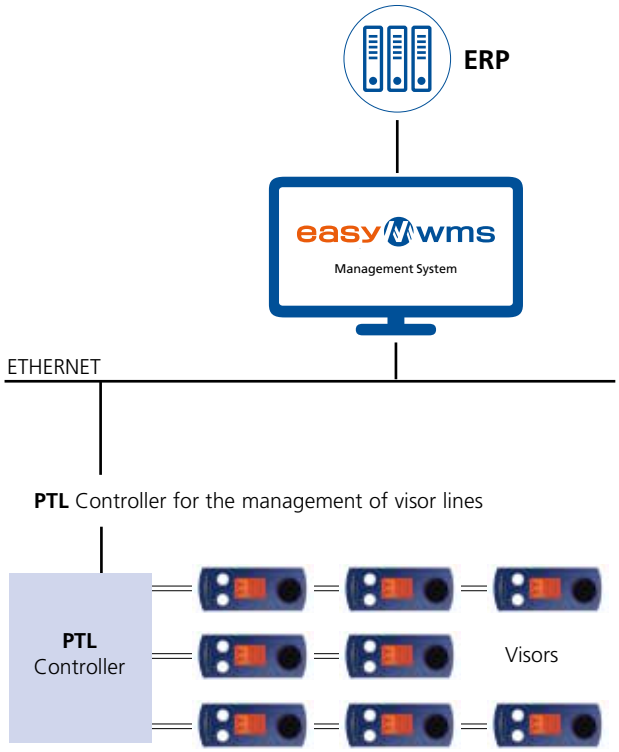

Put-to-light system

This is the same system as the previous one, although the goods are deposited in the free space of the racking where the numerical screen is switched on.

HIERROS COSTA, S.A.
Costa Forte
KGS
N.W
G.W

Areas of application

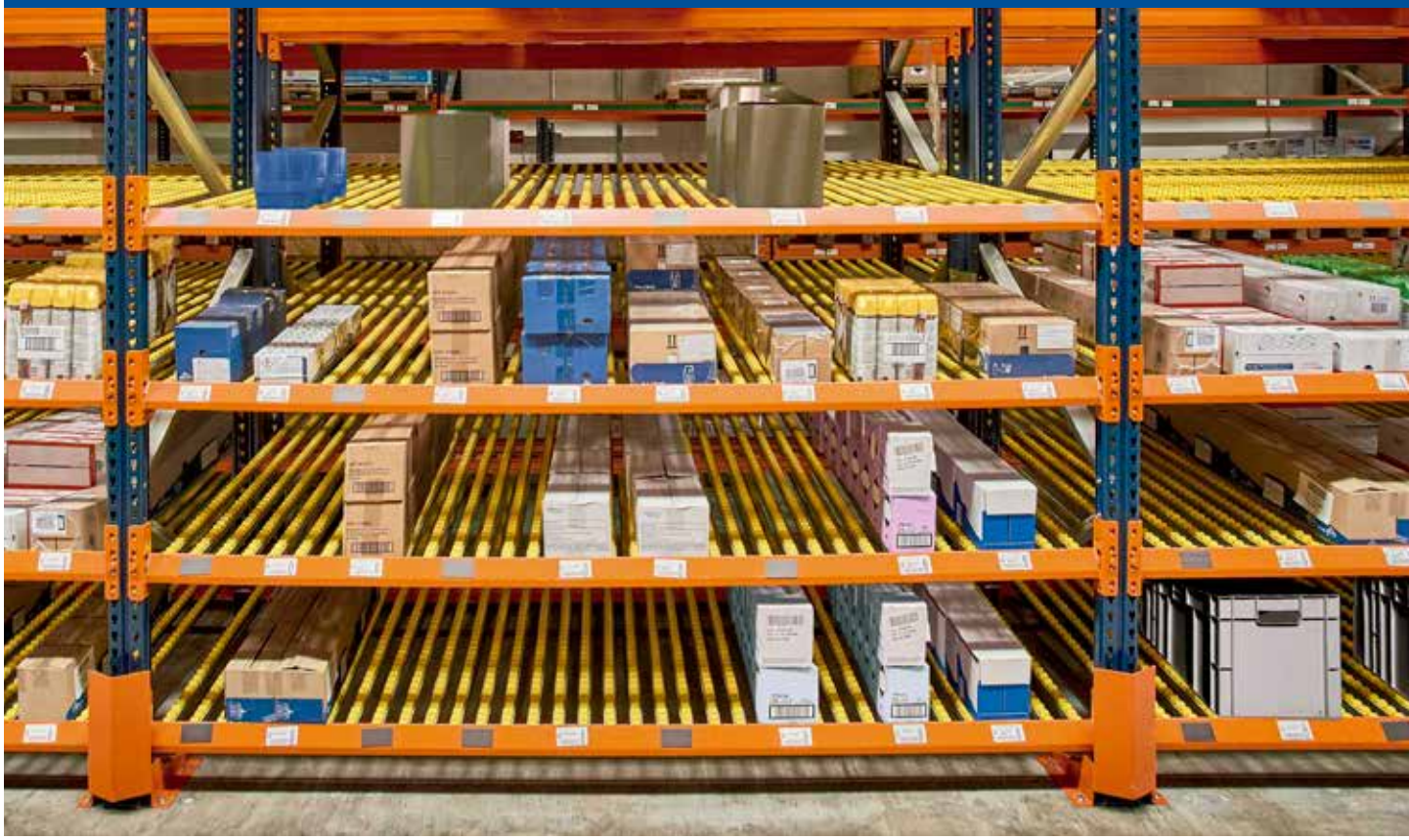

A wide range of sectors make use of this storage system, ranging from warehouses for mass consumption products, pharmaceuticals or cosmetics, to IT and car industry items, etc.

As a rule, they are installed in areas with considerable picking activity, but also in assembly chains, buffer ware houses between two work points, etc.

Here below are several examples for the application of this system.

Electrical material distribution company

Pharmaceutical company

Technology components company

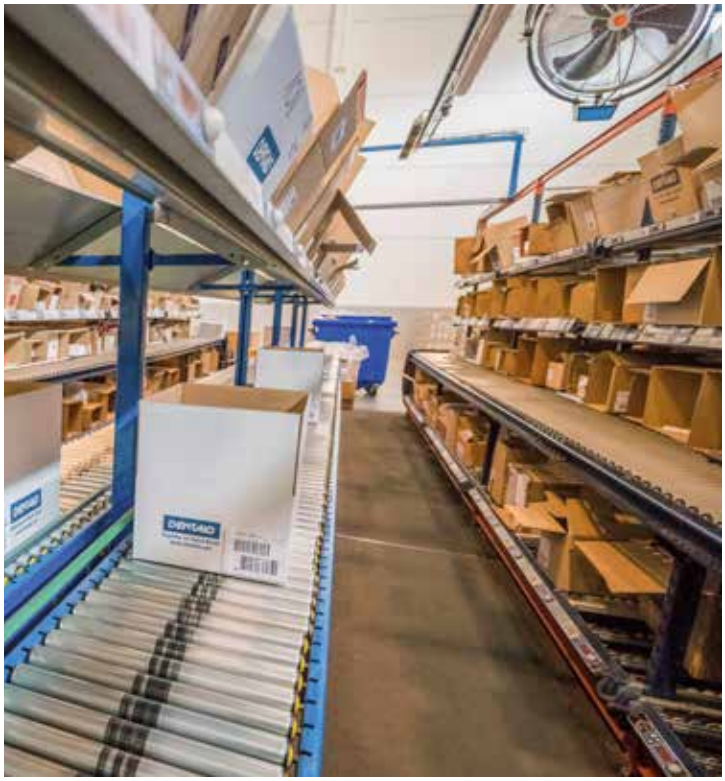

Company in the dental health sector

Food supplements manufacturer

e-mail: info@mecalux.nl - mecalux.nl

MECALUX NEDERLAND B.V.

Tel. +31 208 08 30 96
Herikerbergweg 282
1101 CT Amsterdam

Mecalux is actief in meer dan 70 landen wereldwijd

vertegenwoordigd in: Argentinië - België - Brazilië - Canada - Chili - Colombië - Duitsland - Frankrijk - Groot-Brittannië
Italië - Mexico - Nederland - Polen - Portugal - Slowakije- Spanje - Tsjechische Republiek - Turkije - Uruguay - US